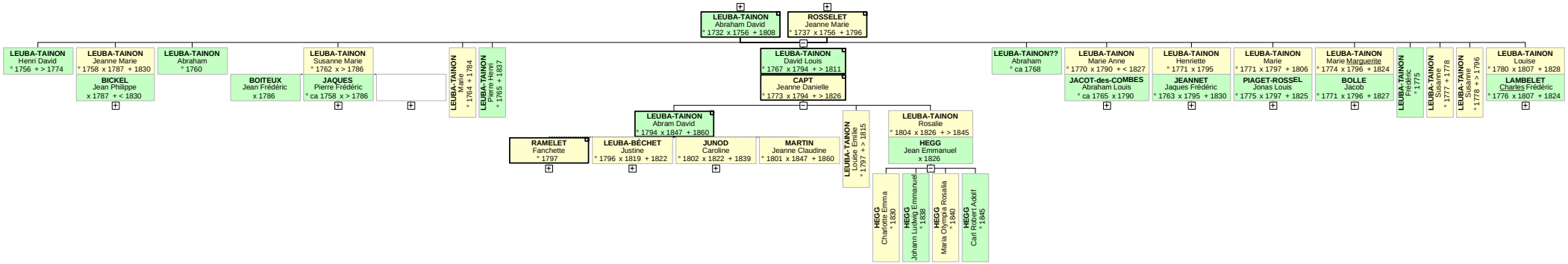
LEUBA-TAINON
Abraham David
° 1732 x 1756 + 1808
ROSSELET
Jeanne Marie
° 1737 x 1756 + 1796
LEUBA-TAINON
Henri David
° 1756 + > 1774
LEUBA-TAINON
Jeanne Marie
° 1758 x 1787 + 1830
BICKEL
Jean Philippe
x 1787 + < 1830
LEUBA-TAINON
Abraham
° 1760
BOITEUX
Jean Frédéric
x 1786
LEUBA-TAINON
Susanne Marie
° 1762 x > 1786
JAQUES
Pierre Frédéric
° ca 1758 x > 1786
LEUBA-TAINON
Marie
° 1764 + 1784
LEUBA-TAINON
Pierre Henri
° 1765 + 1837
LEUBA-TAINON
David Louis
° 1767 x 1794 + > 1811
CAPT
Jeanne Danielle
° 1773 x 1794 + > 1826
LEUBA-TAINON
Abram David
° 1794 x 1847 + 1860
RAMELET
Fanchette
° 1797
LEUBA-BÈCHET
Justine
° 1796 x 1819 + 1822
JUNOD
Caroline
° 1802 x 1822 + 1839
MARTIN
Jeanne Claudine
° 1801 x 1847 + 1860
LEUBA-TAINON
Louise Emilie
° 1797 + > 1815
LEUBA-TAINON
Rosalie
° 1804 x 1826 + > 1845
HEGG
Jean Emmanuel
x 1826
HEGG
Charlotte Emma
° 1830
HEGG
Johann Ludwig Emmanuel
° 1838
HEGG
Maria Christina Rosalia
° 1840
HEGG
Carl Robert Adolf
° 1845
LEUBA-TAINON??
Abraham
° ca 1768
LEUBA-TAINON
Marie Anne
° 1770 x 1790 + < 1827
JACOT-des-COMBES
Abraham Louis
° ca 1765 x 1790
LEUBA-TAINON
Henriette
° 1771 x 1795
JEANNET
Jaques Frédéric
° 1763 x 1795 + 1830
LEUBA-TAINON
Marie
° 1771 x 1797 + 1806
PIAGET-ROSSEL
Jonas Louis
° 1775 x 1797 + 1825
LEUBA-TAINON
Marie Marguerite
° 1774 x 1796 + 1824
BOLLE
Jacob
° 1771 x 1796 + 1827
LEUBA-TAINON
Frédéric
° 1775
LEUBA-TAINON
Susanne
° 1777 + 1778
LEUBA-TAINON
Susanne
° 1779 + 1796
LEUBA-TAINON
Louise
° 1780 x 1807 + 1828
LAMBELET
Charles Frédéric
° 1776 x 1807 + 1824