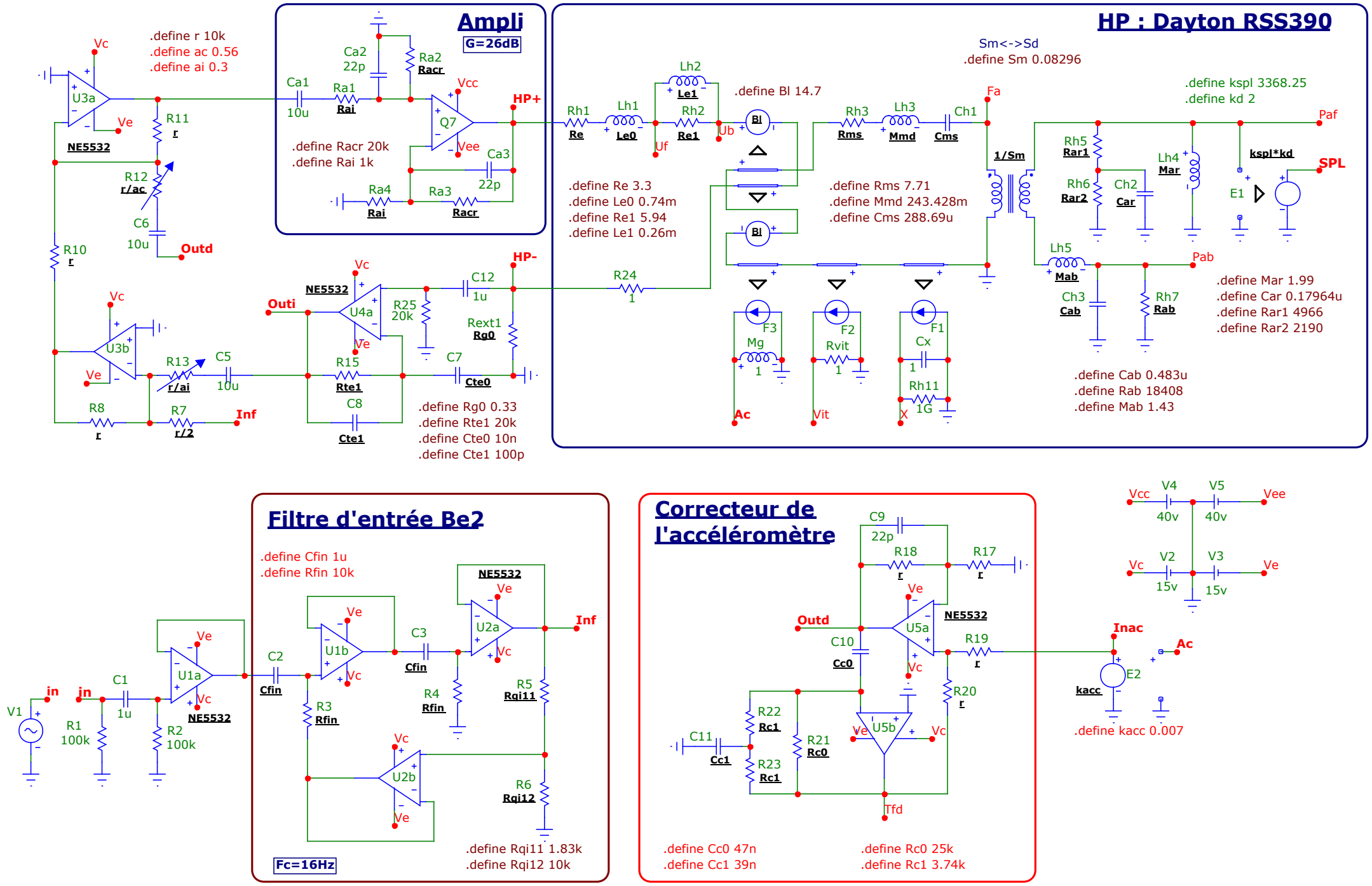
Ampli
G=26dB
.define r 10k
.define ac 0.56
.define ai 0.3
.define Racr 20k
.define Rai 1k
HP : Dayton RSS390
Sm<->Sd
.define Sm 0.08296
.define Bl 14.7
.define kspl 3368.25
.define kd 2
.define Re 3.3
.define Le0 0.74m
.define Re1 5.94
.define Le1 0.26m
.define Rms 7.71
.define Mmd 243.428m
.define Cms 288.69u
.define Mar 1.99
.define Car 0.17964u
.define Rar1 4966
.define Rar2 2190
.define Cab 0.483u
.define Rab 18408
.define Mab 1.43
.define Rg0 0.33
.define Rte1 20k
.define Cte0 10n
.define Cte1 100p
Filtre d'entrée Be2
.define Cfin 1u
.define Rfin 10k
.define Rqi11 1.83k
.define Rqi12 10k
Fc=16Hz
Correcteur de l'accéléromètre
.define Cc0 47n
.define Cc1 39n
.define Rc0 25k
.define Rc1 3.74k
.define kacc 0.007
NE5532
Outd
Outi
HP+
HP-
SPL
Inf
Inac
Ac
in
Vc
Ve
Vcc
Vee
Fa
Paf
Pab
Vit
Tfd